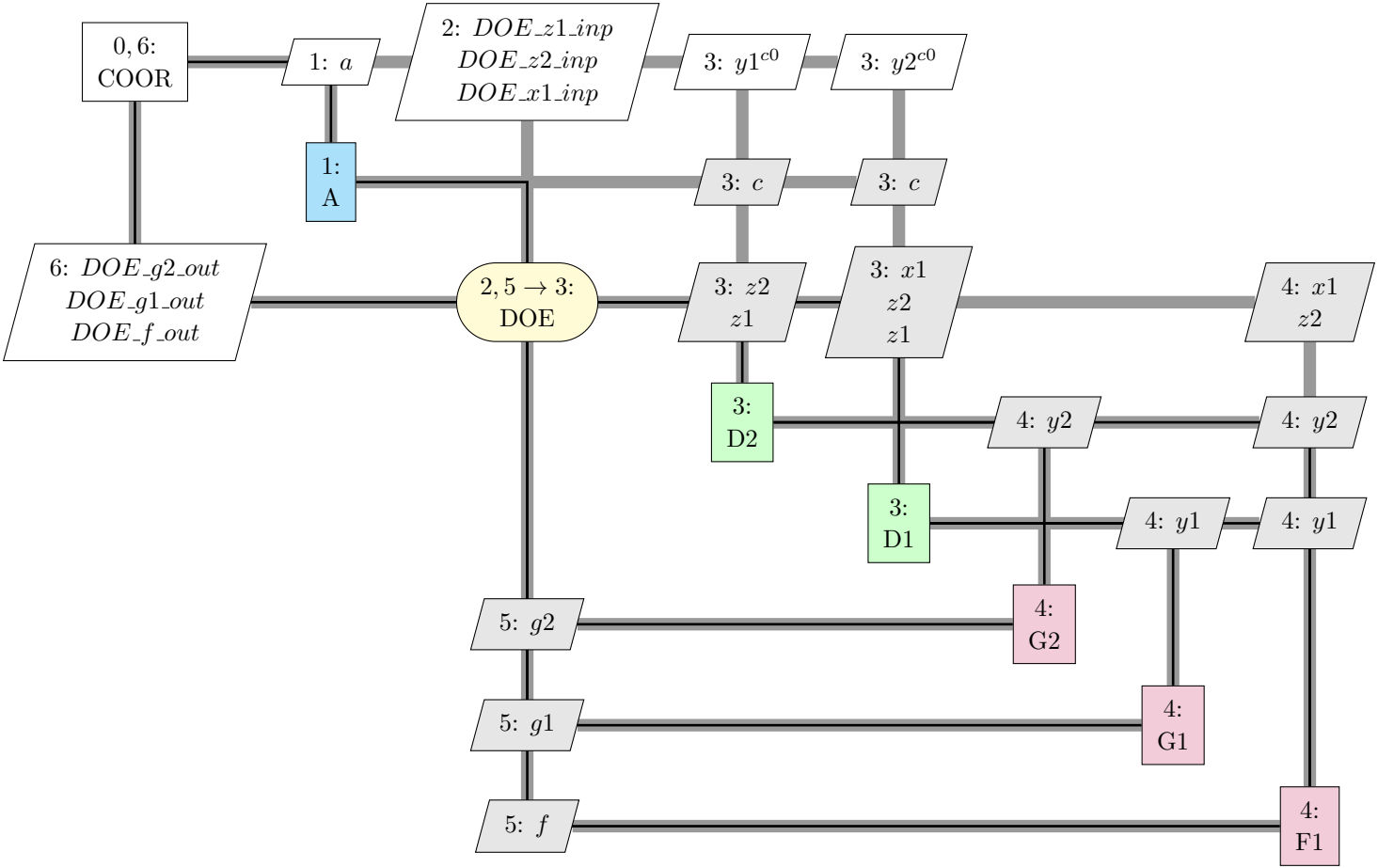
0, 6: COOR
1: a
2: DOE_z1_inp DOE_z2_inp DOE_x1_inp
3: $y1^{c0}$
3: $y2^{c0}$
1: A
3: c
3: c
6: DOE_g2_out DOE_g1_out DOE_f_out
$2, 5 \rightarrow 3$: DOE
3: $z2$ $z1$
3: $x1$ $z2$ $z1$
4: $x1$ $z2$
3: D2
4: $y2$
4: $y2$
3: D1
4: $y1$
4: $y1$
5: $g2$
4: G2
5: $g1$
4: G1
5: f
4: F1